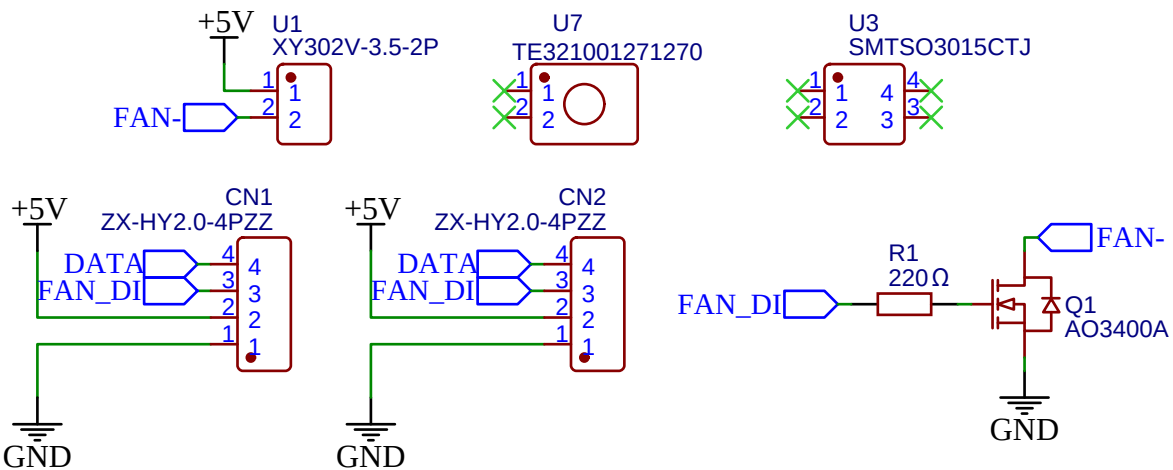

TITLE: Radiator Fan Universal		REV: 0.2
	Company: LEOTRO	Sheet: 1/1
	Date: 29-1-2024 Drawn By: Loek	